Specification

SelfCookingCenter® SCC Marine version 102 E (10 x 2/1 - 20 x 1/1 GN)

Reference number:



iCookingControl® - 7 operating modes



Function - Automatic-Mode
iCookingControl with the 7 applications for meat, poultry, fish, side dishes, egg dishes & baked goods. Finishing, to easily enter the desired result with automatic adjustment of the ideal cooking path.

Combi-Steamer mode

Steam between 30 °C and 130 °C

Hot-air from 30 °C-300 °C

Combination of steam and hot-air 30 °C-300 °C

HiDensityControl®

Patented distribution of the energy in the cooking cabinet

iLevelControl ILC

Mixed loads with individual monitoring of every rack depending on the type and quantity of the load as well as the number of door openings.

Efficient CareControl

Efficient CareControl recognises soiling and scale and removes it automatically.

Description

- Cooking appliance for automatically cooking (Automatic mode) meat, poultry, fish, side dishes/vegetables, egg dishes/desserts, bakery products and for automatic finishing®. With an intelligent system for optimising mixed loads in production and in à la carte service as well as a fully automatic cleaning and care system.
- Hot-air steamer (combi-steamer mode) conforming to DIN 18866 for most of the cooking methods used in commercial kitchens for the optional use of steam and hot-air, individually, in succession or in combination.

Working safety

- Detergent and Care tabs (solid detergents) for optimum working safety
- HACCP data output and software update via the integrated Ethernet and USB port
- Safety temperature limiter for steam generator and hot-air heating
- VDE approved for unsupervised operation
- Maximum rack height 1.60 m for use on an original base cabinet
- Integral fan impeller brake
- Door handle with right/left and slam function
- Approved by Germanische Lloyd and USPHS

Operation

- Remote control function for appliance using software and mobile app
- iCC-Cockpit – graphically supported overview of the current cooking chamber climate, the expected progress of the cooking process, review and forecast as well as options at the end of cooking
- iCC Messenger – informs on current and automatic adjustments to the cooking process
- iCC Monitor – Overview of all automatic adjustments to the cooking process
- 9 self-configurable, user-specific operating display (images, text, etc.)
- Record mode – Determination of the ideal cooking path for calibrated products using the core temperature probe for subsequent use without a core temperature probe, with automatic consideration of load quantity
- Self-learning operation, automatically adapts to actual usage
- 8.5" TFT color monitor and touch screen with self-explanatory symbols for ease of operation
- Control second unit from the main unit (units must be connected via ethernet or network)
- Application and user manuals can be called up on the unit display for the current actions

Cleaning, care and operational safety

- Automatic cleaning and care system for cooking cabinet and steam generator works regardless of the water pressure supplied
- 7 cleaning stages for unsupervised cleaning and care - even overnight
- Automatic cleaning and descaling of the steam generator
- Automatic cleaning prompts indicating the cleaning stage and volume of chemicals in relation to the level of soiling
- Soiling and care status are displayed on the monitor
- Diagnostic system with automatic service notices displayed
- Self-Test function for actively checking unit's functions

Features

- Rear-ventilated triple-glazed cooking cabinet door, two hinged inside panes (for easy cleaning) with a special heat-reflecting coating
- LED cooking cabinet and rack lighting - energy-saving, durable and low-maintenance
- Optical rack signalling function
- Core temperature probe using 6 measuring points with automatic error correction. Positioning aid for core temperature probe included
- Climate management - humidity measured, set and regulated to one percent accuracy. Actual humidity in the cooking cabinet can be set and read on the control panel in Combi-Steamer modes
- Individual Programming of at least 1200 cooking programs with up to 12 steps
- Humidification variable in 3 stages from 86°F–500°F (30°C–260°C) in hot air or combination
- Integrated Ethernetsocket to connect to a cloud based system for administration of cooking processes, management of HACCP and service data and remote control
- High-performance, fresh-steam generator with automatic descaling
- Dynamic air circulation in cooking cabinet with reversing wheel fan with 5 fan speeds, programmable
- Integral, maintenance-free grease extraction system with no additional grease filter
- Operation without a water softener and without additional descaling
- Separate solenoid valves for normal and soft water
- Cool-down function for fast cabinet fan cooling
- Automatic adaptation to the installation location (height, climate, etc.)
- Removable, swivelling hinging racks (distance between rails 2 5/8" / 68 mm)
- Material inside and out 304 (DIN 1.4301) stainless steel
- Hand shower with automatic retracting system
- Fixed waste water connection conforming to SVGW requirements were permitted
- Demand-related energy supply
- Lengthwise loading for 18"x26" or 2/1, 1/1 GN accessories
- 5 programmable proofing stages
- Securing means for fixing the units
- Adjustable door immobiliser for fixing the cooking cabinet door, even during rough sea crossings
- Automatic, pre-selected starting time with adjustable date and time
- Special grid shelves with locks prevent the Gastronorm accessories from slipping out
- Stainless steel feet on units
- Uses the LED lighting to signal the end of the preheating phase or the process

Approval/Labels

Planner/Designer:

Specification/Data sheet

Sun Sep 08 00:14:28 CEST 2019

SelfCookingCenter® SCC Marine version 102 E (10 x 2/1 - 20 x 1/1 GN)

Technical Info

Lengthwise loading for:	2/1, 1/1 GN	**Water pressure (flow pressure):**	150-600 kPa / 0,15-0,6 Mpa / 1,5 - 6 bar	**"Hot-air" connection:**	32,9 kW
Capacity (GN-container/ grids):	10 x 2/1 GN / 20 x 1/1 GN				
Number of meals per day:	150-300	**Water drain:**	DN 50 mm		
Height:	1152 mm	**Data interface:**	Splashwater proof LAN socket RJ45		
Weight (gross):	218 kg	**Connected load electric :**	33,6 kW		
Water connection (pressure hose):	3/4" / d 1/2"	**"Steam" connection:**	32,9 kW		

Mains connection	Breaker Size / (amp draw)	Cable crossection
3 AC 440V 60Hz	3x63 A	3 x 10 mm²
3 AC 220V 50/60Hz	3x100A	

Other voltage on request!

Installation

- Recommended left hand clearance for service and maintanance 20" / 500 mm. It must be a minimum of 14" / 350 mm if heat sources are affecting the left side of the unit
- Installations must comply with all local electrical, plumbing and ventilation codes. The local standards and regulations for ventilation systems must be adhered to.
- For proper usage of ConnectedCooking a network socket according to RJ45 has to be provided. For optimal performance a cable-bound connection with a data rate of at least 10 Mb/s is the preferred connection. Alternatively W-LAN connections with appropriate W-LAN adaptors can be used.

Options

- Left hinged door
- Potential free contact for operation indication included
- Safety door lock
- Sous-Vide core temperature probe
- Externally attached core temperature probe
- 3 externally attached core temperature probes for iLevelControl applications
- Mobile oven rack package
- Lockable control panel
- Connection to energy optimising systems + Potential free contact for operation indication included
- Special voltages
- Control panel protection

Accessories

- GN Containers, Trays, Grids
- Stands / Cabinets
- Thermocover
- Superspike (poultry grids), CombiGrill®/Griddle grid
- Heat shield for left hand side panel
- Special Cleaner tablets and care tabs
- Grease drip container
- Signal lamp

RATIONAL Mexico SA de CV
Miguel de Cervantes Saavedra 169, Piso 4
11520 – Ampliación Granada, México City
Phone: +52 (55) 5292 7538

Visit us on the internet: www.rational-online.mx

We reserve the right to make technical improvements

Specification/Data sheet

Sun Sep 08 00:14:28 CEST 2019

SelfCookingCenter® SCC Marine version 102 E (10 x 2/1 - 20 x 1/1 GN)

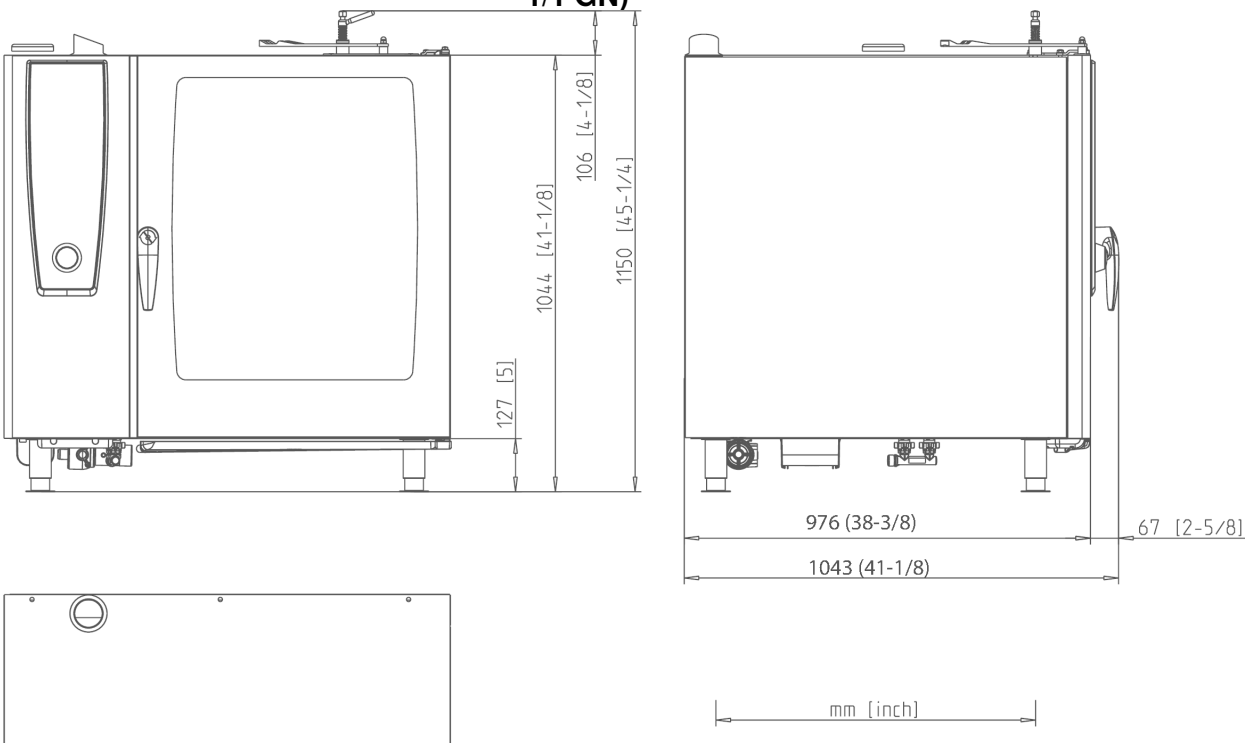

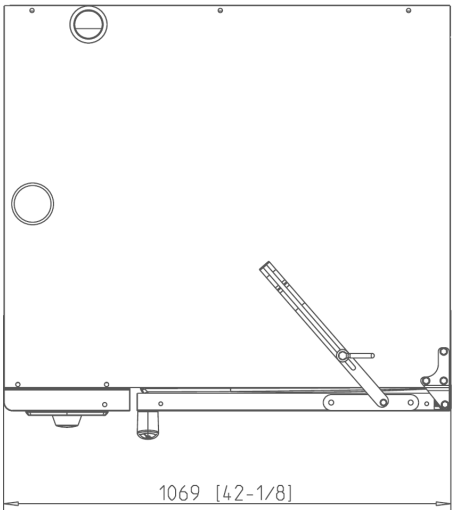

1. Common water supply (cold water) "Single" water connection as shipped 2. Water supply cold water / condensate "Split" water connection 3. Water supply cold / Treated "Split" water connection 4. Water drain 5. Electrical connection wire entrance 6. Chassis Ground connection 7. Steam Vent pipe DN 2 3/4"/ 70 mm 8. Splashwater-proof Ethernet socket RJ45; minimum distance 2" / 50 mm Left side clearance 20" recommended for servicing of unit without the ability to move unit while connected. Measurements in mm (inch)

RATIONAL Mexico SA de CV
Miguel de Cervantes Saavedra 169, Piso 4
11520 – Ampliación Granada, México City
Phone: +52 (55) 5292 7538

Visit us on the internet: www.rational-online.mx

We reserve the right to make technical improvements

Specification/Data sheet

Sun Sep 08 00:14:28 CEST 2019

SelfCookingCenter® SCC Marine version 102 E (10 x 2/1 - 20 x 1/1 GN)

RATIONAL Mexico SA de CV
Miguel de Cervantes Saavedra 169, Piso 4
11520 – Ampliación Granada, México City
Phone: +52 (55) 5292 7538

Visit us on the internet: www.rational-online.mx

We reserve the right to make technical improvements